4" CLASS 150 LAP JOINT FLANGE

8 HOLES Ø0.75 (3/4") ON Ø7.50 B.C.

HOLES STRADDLE CENTERLINES

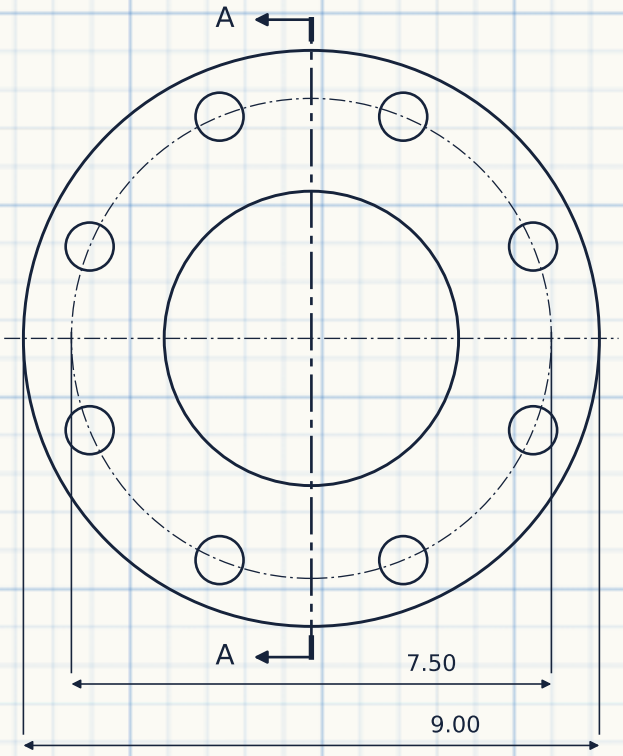

FRONT VIEW

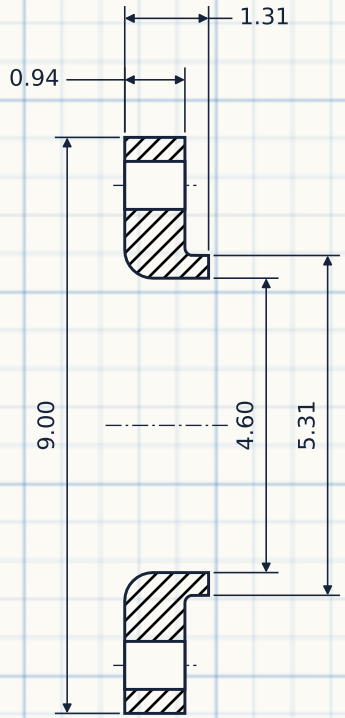

SECTION A-A

01 DIMENSIONS (INCHES)

DIMENSION	VALUE	TOLERANCE
Outside diameter	9.00	—
Thickness at OD, lap joint	0.94	+0.12/−0.00
Length thru hub	1.31	—
Hub diameter at back	5.31	—
Bore, min. (lap joint)	4.60	+0.04/−0.00
Bore corner radius	0.44	—
Bolt circle diameter	7.50	±0.06
Number of bolt holes	8	—
Bolt hole diameter	0.75 (3/4)	—
Bolt diameter	5/8	—
Stud, lap to lap, STD stub ends	4.00 calc.	—

02 NOTES

1 Lapped flange is furnished flat faced and bears on the stub end lap (B16.5 para. 6.4.3). Stub end per MSS SP-43 / ASME B16.9, ordered separately.

2 Hub may be straight or tapered (taper ≤ 7°).

3 Section A-A: bolt holes rotated into cutting plane.

4 Stud bolts: 8 × 5/8" × 4.00" long calc., lap to lap, STD stub ends, per B16.5 Nonmandatory App. C / Table C-1. Length excludes points (para. 6.10.2).

5 Tolerances per B16.5 section 7 (paras. 7.3–7.8); "—" = none listed. Adjacent bolt holes ±0.03; bolt circle to facing conc. 0.06; face perp. to bore 1°.

TEXAS FLANGE
texasflange.com

SHEET ID	TF-B165-LJ-LJ-150-04
REV	C (not for fabrication)
REV NOTE	C: thickness at OD, LJ/THD rules, credit line
STANDARD	ASME B16.5 (current edition)
UNITS	INCHES
SCALE	1:3 (at 11x8.5 print)
DATE	22-OCT-26 (Rev A 16-OCT-26)

SOURCE AND CHECKS

Dimensions per ASME B16.5 (current edition). Checked by Texas Flange against our catalog by script, with two independent AI reviews and an in-house spot check. Methods: https://texasflange.com/spec-sheet-methods/